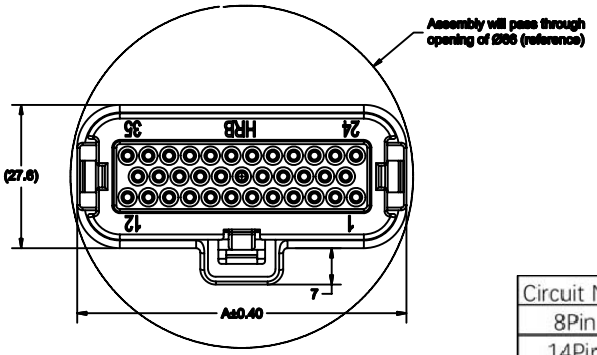

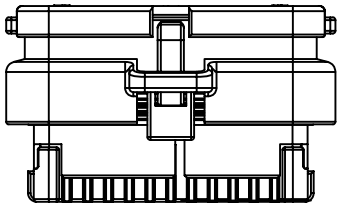

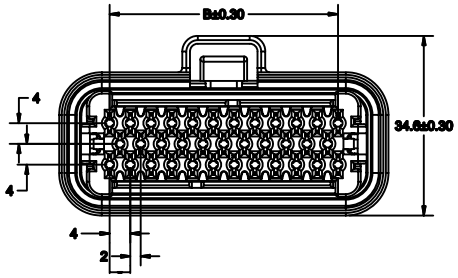

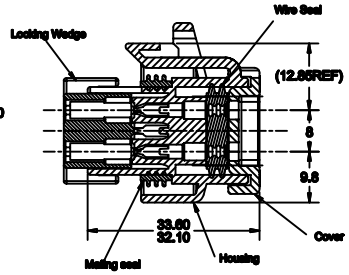

Circuit No.	A	B
8Pin	27.4	8.0
14Pin	35.4	16.0
23Pin	47.4	28.0
35Pin	63.4	44.0

Specifications:
Current Rating:6.0A AC/DC
Voltage Rating:250V AC/DC
Contact Resistance:10m Ohm Max
Insulation Resistance:100M Ohm Min.
Withstanding Voltage:1000V AC/Minute
Operating Temperature Range:−40°C To +105°C
Material and Finish:
Insulator:PBT (UL94V−0)
Insulator Color:White
Contact:Phosphor Bronze
Plating:Tin Plated
How To Order
HTE40−XX−XX
- WH:White Natural
- GY:Grey
- BU:Blue
- OR:Orange
- No.Of Contacts

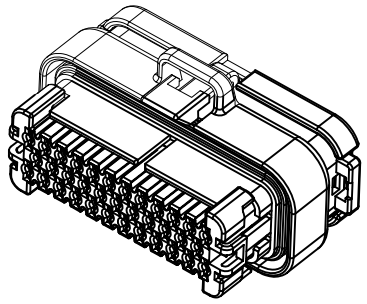

Key coding		
Part No.	HTE40−08−BK	HTE40−08−WH
Color	Black	Natural

Key coding				
Part No.	HTE40−14−BK	HTE40−14−WH	HTE40−14−GY	HTE40−14−BU
Color	Black	Natural	Gray	Blue

Key coding				
Part No.	HTE40−23−BK	HTE40−23−WH	HTE40−23−GY	HTE40−23−BU
Color	Black	Natural	Gray	Blue

Key coding					
Part No.	HTE40−35−BK	HTE40−35−WH	HTE40−35−GY	HTE40−35−BU	HTE40−35−OR
Color	Black	Natural	Gray	Blue	Orange

RoHS Compliant

REV	DATE	FILE	BY
F			
E			
D			
C			
B			
A	29−Jun−2026	(PC0001)	Ken

DRAWN: Ken
CHECKED: Lily Chou
APPROVAL: Chao Peng

GENERAL TOLERANCE:
.X=±0.20
.XX=±0.15

UNIT: MM
SCALE: 1:1
SHEET: 1 / 1
PROJECTION:

HOYATO Connector supplies

DESCRIPTION: 4.0mm Female Housing

PART NO: HTE40−XX−XX

SIZE A4