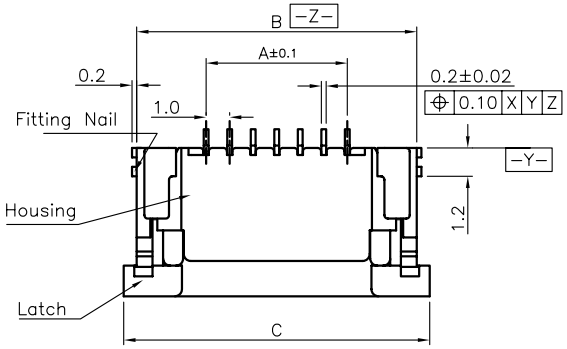

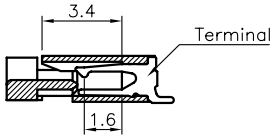

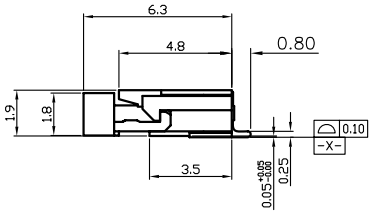

Specifications:
Current Rating:1.0A AC/DC
Voltage Rating:100V AC/DC
Contact Resistance:30m Ohm. Max.
Insulation Resistance:100M Ohm. Min.
DieLectric Withstanding Voltage: 500V R.m.s (for one minute)
Operating Temperature Range:−25°C~+105°C
Material and Finish
Insulator:High Temp. Plastic (Nylon 46 UL94V−0)
Contact:Copper Alloy
Plating: Tin plated

How to Order
FPCRSM10−XX−TC
- TC:Top Contcact
- No.of Contacts
- R/A SMT Type

Contact Dimension

No.Of Pin	DimA	DimB	DimC	DimD	No.Of Pin	DimA	DimB	DimC	DimD
4	3.0	8.9	10.0	5.15	19	18.0	23.9	25.0	20.15
5	4.0	9.9	11.0	6.15	20	19.0	24.9	26.0	21.15
6	5.0	10.9	12.0	7.15	21	20.0	25.9	27.0	22.15
7	6.0	11.9	13.0	8.15	22	21.0	26.9	28.0	23.15
8	7.0	12.9	14.0	9.15	23	22.0	27.9	29.0	24.15
9	8.0	13.9	15.0	10.15	24	23.0	28.9	30.0	25.15
10	9.0	14.9	16.0	11.15	25	24.0	29.9	31.0	26.15
11	10.0	15.9	17.0	12.15	26	25.0	30.9	32.0	27.15
12	11.0	16.9	18.0	13.15	27	26.0	31.9	33.0	28.15
13	12.0	17.9	19.0	14.15	28	27.0	32.9	34.0	29.15
14	13.0	18.9	20.0	15.15	29	28.0	33.9	35.0	30.15
15	14.0	19.9	21.0	16.15	30	29.0	34.9	36.0	31.15
16	15.0	20.9	22.0	17.15	31	30.0	35.9	37.0	32.15
17	16.0	21.9	23.0	18.15	32	31.0	36.9	38.0	33.15
18	17.0	22.9	24.0	19.15					

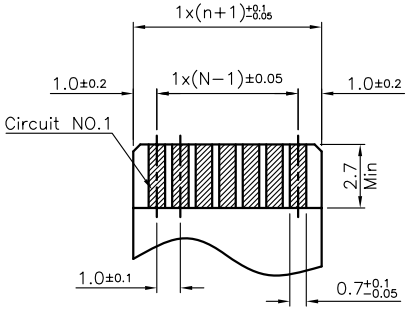

APPLICABLE FPC RECOMMENDED DIMENSION
(THICKNESS:0.3±0.05)

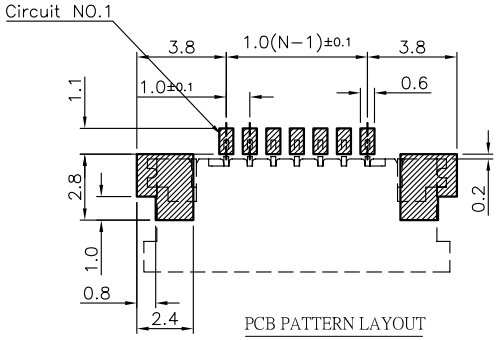

PCB PATTERN LAYOUT

RoHS Compliant

REV	DATE	FILE	BY
F			
E			
D			
C			
B			
A	01−SEP−2009	(PC0001)	Ken

DRAWN: Ken
CHECKED: Lily Chou
APPROVAL: Chao Peng

GENERAL TOLERANCE:
.X=±0.20
.XX=±0.15

UNIT: MM
SCALE: 1:1
SHEET: 1 / 1
PROJECTION:

HOYATO Connector supplies 东莞好亚通电子厂

DESCRIPTION: 1.0mm FPC Conntctor R/A Top Contact SMT Type

PART NO: FPCRSM10−XX−TC

SIZE A4